International Journal of Zoology and Applied Biosciences **ISSN: 2455-9571**
Volume 11, Issue 6, pp: 153-158, 2026
https://doi.org/10.55126/ijzab.2026.v11.i06.019 **http://www.ijzab.com**

Research Article

ANTIBACTERIAL ACTIVITY AND COI GENE-BASED MOLECULAR IDENTIFICATION OF THE FRESHWATER MUSSEL *LAMELLIDENS MARGINALIS*

[1]N. Jeba Shiny, [2]S. Baskara Sanjeevi and [3]*S. Pazhanisamy

[1,3]PG and Research Department of Zoology, Government Arts College (Autonomous), Kumbakonam, Thanjavur, (Affiliated to Bharathidasan University, Tiruchirappalli), Tamil Nadu, India
[2]Department of Zoology, Alagappa Government Arts College (Affiliated to Alagappa University, Karaikudi) Karaikudi, Tamil Nadu, India

Article History: Received 30th August 2026; Accepted 27th October 2026; Published 30th November 2026

ABSTRACT

Freshwater mussels are widely utilized as environmental indicators and are vital to the ecosystem. Bivalve molluscs have grown in popularity as food. Molluscs are highly valued foods because of their delicate flavour and great nutritional value. Freshwater invertebrates are known to be protected against possible infections by their innate immune systems. Furthermore, it is widely known that innate immunity produces antimicrobial substances, such as tiny antimicrobial peptides, as soon as a microbial infection occurs. It is well known that AMPs are potent defenses against viruses, bacteria, fungus, and parasites in multicellular organisms. The current study's objective is to assess the antibacterial activity of edible bivalves that are often found, such *Lamellidens maginalis*. Sample was collected from the Kallanai Dam, Kaveri River in Tamil Nadu between March and May of 2024. Mitochondrial COI genes of all the three populations were investigated to authenticate taxonomic classification of *L. marginalis.* The COI gene sequences confirmed the traditional classification of *L. marginalis* accession number is PZ585461. Antibacterial activity against five different human bacterial pathogenic strains with three different solvent extracts Hexane, Ethanol and Acetone. The Acetone extract showed more efficiency results.

Keywords: *Lamellidens maginalis,* Antibacterial activity, Hexane, Ethanol, Acetone and COI.

INTRODUCTION

Freshwater mussels are widely utilised as environmental indicators and are vital to the ecosystem. Bivalve molluscs have grown in popularity as food. Molluscs are highly valued foods because of their delicate flavour and great nutritional value (high amount of proteins, vitamins, and trace elements) (Lebiedzińska *et al*., 2004; Radgers and Furones 2009). In order to defend against possible pathogens, aquatic invertebrates are known to rely on innate immune processes that contain both interacting cellular and humoral components (Tincu and Taylor, 2004). Freshwater invertebrates are known to be protected against possible infections by their innate immune systems. Furthermore, it is widely known that innate immunity produces antimicrobial substances, such as tiny antimicrobial peptides, as soon as a microbial infection occurs. It is well known that AMPs are potent defences against viruses, bacteria, fungus, and parasites in multicellular organisms (Zasloff, 2002). Given that aquatic animals are possible sources of bioactive chemicals and may endure in a hostile environment where they are surrounded by a variety of pathogenic species, including human diseases (Bouchriti and Goyal, 1992). Human health may be threatened by a number of things, such as viruses, pathogenic bacteria, chemical pollutants, and marine biotoxins. The current study's objective is to assess the antibacterial activity of edible bivalves that are often found, such *Lamellidens maginalis*.

*Corresponding Author: Dr. S. Pazhanisamy, Assistant Professor, PG and Research Department of Zoology, Government Arts College (Autonomous), Kumbakonam, Thanjavur, (Affiliated to Bharathidasan University, Tiruchirappalli), Tamil Nadu, India.

MATERIALS AND METHODS

Sample Collection

Between March and May of 2024, samples of *L. marginalis* were gathered from three distinct locations (water bodies) the Kallanai Dam, Kaveri River in Tamil Nadu, India.

DNA isolation

The DNA was extracted using a slightly altered version of Ruzzante *et al.* (1996)'s modified phenol chloroform technique. A UV spectrophotometer was used to determine the concentration of separated DNA. A final concentration of 50 ng/µl was achieved by diluting the DNA.

Amplification and Sequencing

The final concentration of the mt DNA COI gene was amplified using 50 µl volume reactions containing 5 µl of 1x assay buffer (100 mM Tris-Cl, 500 mMv KCL, 0.1% gelatin, pH 9.0), 2 µl of 2 mM MgCl2 (Genei, Bangalore, India), 0.5V of 5p moles of each primer, 1 µl of 200 mM dNTPs (Genei, Bangalore, India), 0.4 µl of 1.5 U Taq DNA polymerase, 38.6 µl of de-ionized water, and 2 µl of 50 ng template DNA. Two metazoan invertebrate COI primers were used to amplify an internal COI gene fragment.

LCO:5'-GGTCAACAACAAATCATAAAGATATTGG-3'

and

HCO:5'TAAACTTCAGGGTGACCAAAAAATCA-3'
(Folmer *et al.,* 1994).

The first denaturation process lasted 3 minutes at 94 degrees Celsius, followed by 45 seconds at 47 degrees Celsius, 60 seconds at 72 degrees Celsius, and a final extension for 10 minutes at 72 degrees Celsius. The most powerful PCR results were chosen for sequencing once they were seen on a 2% agarose gel. Following the manufacturer's recommendations, all PCR products were directly sequenced using an ABI 3730 (Applied Biosystems Inc.) sequencer after being purified using the QIA-quick PCR purification kit (Qiagen).

Sequence Analysis

Gene Bank Acession Numbers were obtained by depositing COI gene sequences of *L. marginalis* species from various sites. PZ585461 is the accession number that GenBank provided. *L. marginalis'*s mitochondrial COI gene sequences were examined. Every sequence had a read length of around 567 base pairs. The default parameters of CLUSTAL W (Thompson *et al*., 1994) were used to align the sequences. The Kimura 2-parameter (K2P) distance model was used to calculate nucleotide sequence divergences (Kimura, 1980). Finch TV software Version 1.4.0 (Geospiza Inc.) was used to examine DNA sequences. Chromas were used for manual sequence editing, while MEGA12 was used for alignment.

Microorganisms Used

The following microorganisms were obtained from the hospital in order to assess the antimicrobial potential of bacterial isolates: *Pseudomonas aeruginosa* ATCC 27853, *Escherichia coli* ATCC 25922, *Streptococcus pyogenes* ATCC 19615, *Enterobacter aerogenes* ATCC 13048, and *Klebsilla pneumonie* ATCC 25955. The bacteria were chosen because they have strains that are resistant to many drugs and can cause major problems in humans. The bacterial strains are part of the hospital's culture collection.

Agar Well diffusion method

Sterile nutritional broth was used to inoculate pathogenic bacterial strains, which were then cultured for 24 hours at 37°C. Using the well-cut diffusion method, the produced crude extracts' antibacterial activity was examined. Muller Hinton Agar plates that had previously been swabbed with the bacterial cultures were pierced with the wells using a 6mm sterile cork borer. 40 µL, 60 µL, 80 µL, and 100 µL of various solvent extracts at varying concentrations were added to the wells. As a negative control, distilled water was employed. The positive control was amoxicillin. The plates were covered with sterile plastic bags to keep them from drying out. All plates were later incubated at 37°C for 24 h. The antibacterial activity was measured based on the inhibition zone around the well with mussels extract (Hexane, Ethanol, and Acetone). The result was obtained by measuring the inhibition zone for each well and expressed in millimeter.

RESULTS AND DISCUSSION

Lamellidens marginalis, a freshwater bivalve, was identified using a combination of DNA analysis and morphological characterisation. Based on additional diagnostic criteria and visible shell characteristics, morphological identification was carried out. The nucleotide sequence that resulted from molecular identification utilising DNA sequence analysis was given the accession number PZ585461. The specimen is identified as *Lamellidens marginalis* based on the combined morphological and molecular data. Five nucleotide sequences were used to build the phylogenetic tree in order to evaluate the evolutionary connections between the taxa under study. The tree was rooted using *Carassius auratus* as the out-group. Each location has 0.05 nucleotide changes represented by the scale bar. The genetic links between the examined sequences are depicted in the tree (Figure1). The Neighbor-Joining approach was used to infer the evolutionary history (Saitou and Nei, 1987). The ideal tree is displayed with a total branch length of 0.597. Next to the branches is the proportion of duplicate trees where the related taxa grouped together in the bootstrap test (1,000 repetitions) (Felsenstein, 1985). With branch lengths in the same units as the evolutionary distances used to deduce the phylogenetic tree, the tree is scaled. The evolutionary distances are expressed in terms of the number of base substitutions per site and were calculated using the Kimura 2-parameter approach

(Kimura, 1980). Five coding nucleotide sequences employing first, second, third, and non-coding positions were included in the analytical process. A final data set of 567 places was produced by applying the pairwise deletion option to all unclear positions for each sequence pair. Using up to seven parallel computational threads, evolutionary studies were carried out in MEGA12 (Kumar *et al*., 2024).

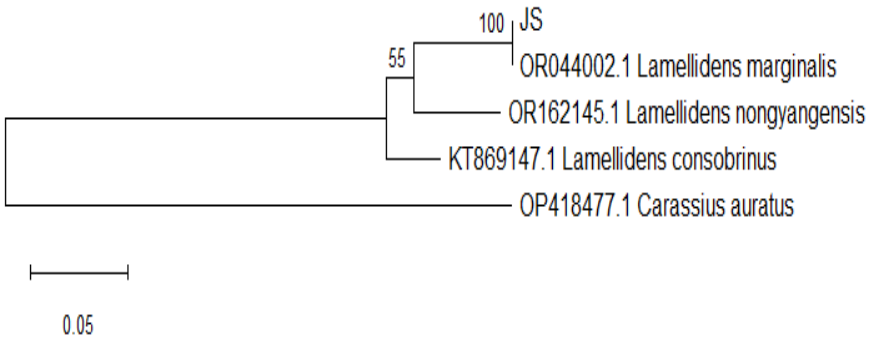

Figure1. Phylogenetic relationship of *Lamellidens marginalis* and related species inferred using the Neighbor-Joining (NJ) method.

Table1. Estimates of Evolutionary Divergence between Species Sequences.

S. No.	Species	1	2	3	4	5
1	JS		**0.000**	**0.013**	**0.045**	**0.015**
2	OR044002.1_Lamellidens_marginalis	**0.000**		**0.013**	**0.045**	**0.015**
3	KT869147.1_Lamellidens_consobrinus	**0.081**	**0.081**		**0.041**	**0.015**
4	OP418477.1_Carassius_auratus	**0.536**	**0.536**	**0.487**		**0.042**
5	OR162145.1_Lamellidens_nongyangensis	**0.096**	**0.096**	**0.100**	**0.506**	

It displays the amount of base substitutions per site between sequences. The standard error estimate or estimates are displayed above the diagonal. The Kimura 2-parameter model was used for the analyses (Kimura, 1980). Five coding nucleotide sequences employing first, second, third, and non-coding positions were included in the analytical process. A final data set of 567 places was obtained by applying the pairwise deletion option to all unclear positions for each sequence pair. MEGA12 was used to perform evolutionary studies (Kumar *et al*., 2024). As filter feeders, freshwater mussels absorb and concentrate pollutants and faecal coliform bacteria from the waterways around them, serving as environmental health indicators. Outside of India, attempts have been made to monitor the health and pollution level of this crucial aquatic ecosystem component. However, there is a lack of information about these researches in India. In order to verify these earlier findings, an attempt was undertaken to analyse the tissues of the freshwater mussel *Lamellidens maginalis* and the surrounding water. Results in additional freshwater bivalves. Three crude extracts from *Lamellidens maginalis* were tested for antibacterial activity against five human pathogenic bacterial strains in this study. Table 2 lists the antimicrobial properties of several *Lamellidens marginalis* extracts. The well-diffusion approach is typically used for preliminary screening of the antibacterial activity of various extracts and is recommended for the quick discovery of bioactive metabolites (Ky *et al*., 2019). When *Lamellidens marginalis* was tested for antibacterial activity, Acetone extract MA had the most action against *Klebsilla pneumonie* (10 mm) and Streptococcus pyogenes (12 mm), but the least activity against *Pseudomonas aeruginosa.* However, Figure 2 shows this action against both Gram-positive and Gram-negative bacteria with the solvent's (acetone) inhibitory zone. *Enterobacter aerogenes, Escherichia coli, Klebsiella pneumoniae, Pseudomonas aeruginos, and Streptococcus pyogenes* were not inhibited by the ethanol extract. The solvent's zone of inhibition against Streptococcus pyogenes and other pathogens was zero. Both strains of the five pathogens examined in this investigation were more susceptible to acetone extracts. These findings imply that gram-negative bacteria could be more vulnerable than other strains under investigation. The distinct structural variations between gram-positive and gram-negative bacteria's outer layers might be one explanation for the observed outcomes. Gram-negative bacteria have an outer membrane and a distinct periplasmic region that are absent from gram-positive bacteria, according to Shan *et al*. (2007). Similarly, the hexane extract from mussels inhibits pathogens at greater concentrations. Enterobacter aerogenes (2 mm) and Streptococcus pyogenes (4 mm) were suppressed at concentrations of 100 µl. In contrast, acetone extract inhibits all pathogens and has a larger zone of inhibition.

Table 2. Diameters of the inhibition formed by strains in millimeters against clinical pathogens tested in solid medium assay. Negative control sterile distilled water did not show a zone of inhibition. Positive control with Amoxicillin for inhibition zone greater than 10mm.

Pathogens	Different extracts of *Lamellidens marginalis* (Zone of inhibition in mm)		
	Hexane	Ethanol	Acetone
Pseudomonas aeruginosa	3	1	8
Escherichia coli	1	2	6
Streptococcus pyogenes	4	1	18
Enterobacter aerogenes	2	1	8
Klebsilla pneumonie	-	-	15

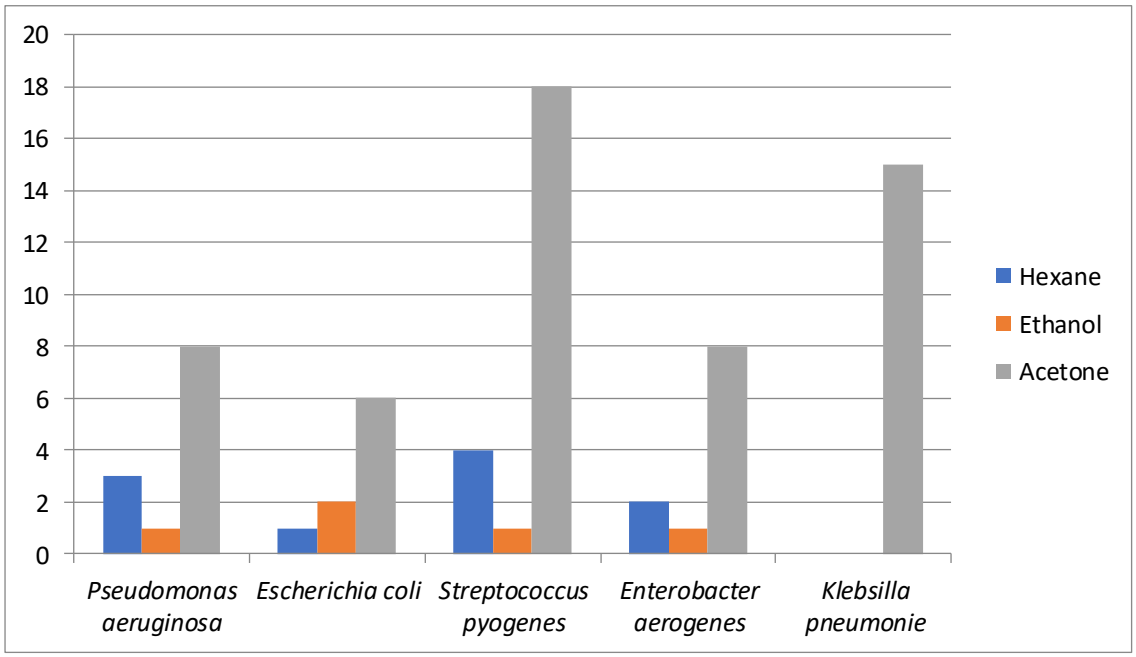

Figure 2. Antibacterial susceptibility of *Lamellidens marginalis* solvent extract against *Pseudomonas aeruginosa ATCC 27853, Escherichia coli* ATCC 25922*, Streptococcus pyogenes* ATCC 19615, *Enterobacter aerogenes* ATCC 13048 *and Klebsilla pneumonie* ATCC-25955.Positive control with Amoxicillin.

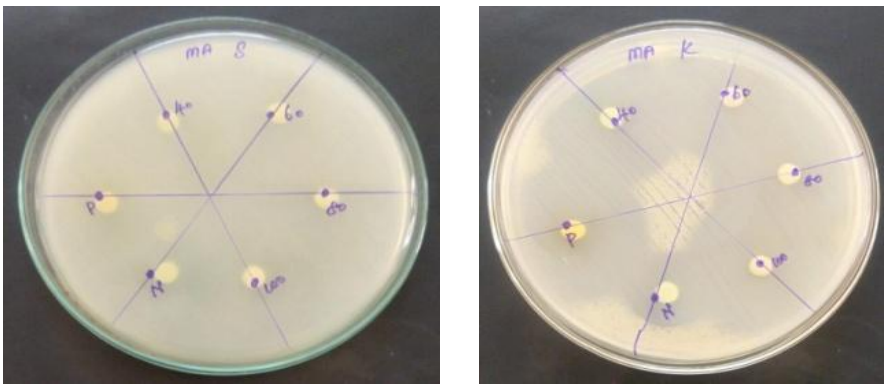

Figure 3. Antibacterial susceptibility of *Lamellidens marginalis* Acetone solvent extract *Streptococcus pyogenes ATCC 19615and Klebsilla pneumonie ATCC 25955* shows highest zone of inhibition.

Furthermore, the hydrophilic surface of gram-negative bacteria's outer membrane, which prevents many antibiotic substations from penetrating, is linked to the bacteria's resistance to antibacterial substances. Additionally, Kiran *et al*. (2014) hypothesised that water-insoluble antibacterial chemicals are more effective. The fact that the acetone extracts had more antibacterial activity than the other extracts tested supports this claim. The study's findings are consistent with those of Nightingale *et al*. (2018), who reported that slug ethyl acetate extract has strong

antimicrobial activity against *Klebsiella pneumoniae* and *Escherichia coli*. According to other research, several solvent extracts from black mussels A variety of gram-positive and gram-negative infections were also greatly impacted by *Mytilus gallo* provincialis in Badiu *et al*. (2008), horse mussel *Modiolus modiolus* in Haug *et al*. (2004), crustaceans in Kiran *et al*. (2014), and bivalves in Ky *et al*. (2019). Unfortunately, the numerous test techniques, the small sample size, and the variety of pathogens tested make it challenging to compare the findings reported in different investigations. A wide range of bioactive chemicals in the extracts and the particular extracting ability of the solvents might account for observed discrepancies and variations in antibacterial activity reported by several researches. Mitochondrial COI genes of all the three populations were investigated to authenticate taxonomic classification of *L. marginalis.* The COI gene sequences confirmed the traditional classification of *L. marginalis* at Molecular level proving that it belongs to Unionidae family.

CONCLUSION

The Indian subcontinents freshwater is home to the bivalve *Lamellidens maginalis.* According to reports, the animal has significant therapeutic value. Additionally, it is utilised in the cosmetic, cement, and lime sectors. People in certain regions of the nation have the practice of consuming bivalve as a rich source of protein.

ACKNOWLEDGEMENT

Authors are thankful to Head, Department of Zoology and Principal, Government Arts College (Autonomous), Kumbakonam, Thanjavur Dist, Tamil Nadu, India, for encouraging us to carry out this research.

CONFLICT OF INTERESTS

The authors declare no conflict of interest

ETHICS APPROVAL

Not applicable

FUNDING

This study received no specific funding from public, commercial, or not-for-profit funding agencies.

AI TOOL DECLARATION

The authors declare that no AI and related tools are used to write the scientific content of this manuscript.

DATA AVAILABILITY

Data will be available on request

REFERENCES

Badiu, D. L., Balu, A. M., Barbes, L., Luque, R., Nita, R., Radu, M., Rosoiu, N. (2008). Physico-chemical characterisation of lipids from *Mytilus galloprovincialis* (L.) and *Rapana venosa* and their healing properties on skin burns. *Lipids, 43*(9), 829.

Bouchriti, N., & Goyal, S. M. (1992). Evaluation of three methods for the concentration of poliovirus from oysters. *Microbiologica, 15*(4), 403-408.

Felsenstein, J. (1985). Confidence limits on phylogenies: An approach using the bootstrap. *Evolution, 39*(4), 783-791.

Haug, T., Stensvåg, K., Olsen, Ø. M., Sandsdalen, E., & Styrvold, O. B. (2004). Antibacterial activities in various tissues of the horse mussel, *Modiolus modiolus*. *Journal of Invertebrate Pathology, 85*(2), 112-119.

Kimura, M. (1980). A simple method for estimating evolutionary rates of base substitutions through comparative studies of nucleotide sequences. *Journal of Molecular Evolution, 16*(2), 111-120.

Kiran, N., Siddiqui, G., Khan, A. N., Ibrar, K., & Tushar, P. (2014). Extraction and screening of bioactive compounds with antimicrobial properties from selected species of mollusk and crustacean. *Journal of Clinical & Cellular Immunology, 5*(1), 1000189.

Kumar, S., Stecher, G., Suleski, M., Sanderford, M., Sharma, S., & Tamura, K. (2024). MEGA12: Molecular evolutionary genetic analysis version 12 for adaptive and green computing. *Molecular Biology and Evolution, 41*(12), msae263.

Ky, P. X., Mien, P. T., Hy, L. H. K., Ha, D. V., Anh, N. P., Thiet, D. T., The, H. V. (2019). Investigation of antibacterial activity of crude extracts from marine snails and bivalves in the southern coast of Vietnam. *American Journal of Biomedical and Life Sciences, 7*(1), 10-15.

Lebiedzińska, A., Zdrojewska, I., & Szefer, P. (2004). Assessment of the nutritional value of certain molluscs. *Roczniki Państwowego Zakładu Higieny, 55*(2), 165-169.

Nightingale, S., Mettilda, S., & Vinoliya, J. (2018). Antimicrobial activity of whole-body extracts of slug *Mariaella dussumieri* (Gray, 1855) against clinical pathogens.

Rodgers, C. J., & Furones, M. D. (2009). Antimicrobial agents in aquaculture: Practice, needs and issues. *Options Méditerranéennes, 86*, 41-59.

Saitou, N., & Nei, M. (1987). The neighbor-joining method: A new method for reconstructing phylogenetic trees. *Molecular Biology and Evolution, 4*(4), 406-425.

Shan, B., Cai, Y. Z., Brooks, J. D., & Corke, H. (2007). The in vitro antibacterial activity of dietary spice and medicinal herb extracts. *International Journal of Food Microbiology, 117*(1), 112-119.

Tincu, J. A., & Taylor, S. W. (2004). Antimicrobial peptides from marine invertebrates. *Antimicrobial Agents and Chemotherapy, 48*(10), 3645-3654.

Zasloff, M. (2002). Antimicrobial peptides of multicellular organisms. *Nature, 415*(6870), 389-395.

Ruzzante, D. E., Taggart, C. T., Cook, D., & Goddard, S. (1996). Genetic differentiation between inshore and offshore Atlantic cod (*Gadus morhua*) off Newfoundland: Microsatellite DNA variation and antifreeze level. *Canadian Journal of Fisheries and Aquatic Sciences, 53*(3), 634-645.

Folmer, R. H. A., Nilges, M., Folkers, P. J. M., Konings, R. N. H., & Hilbers, C. W. (1994). A model of the complex between single-stranded DNA and the single-stranded DNA binding protein encoded by gene V of filamentous bacteriophage M13. *Journal of Molecular Biology, 240*(4), 341-357.

© The Author(s) 2026. This article is published by the *International Journal of Zoology and Applied Biosciences (IJZAB)* under the terms of the **Creative Commons Attribution 4.0 International License (CC BY 4.0)**. This license permits anyone to share, copy, redistribute, adapt, remix, transform, and build upon the material in any medium or format, provided that appropriate credit is given to the original author(s), the source, and the license, and that any changes made are indicated.